ES Series Encoder Specifications

MECHANICAL

Dimensions ..... (See drawing below)
Weight ..... 2 oz.
Shaft Size ..... 0.5 in.
Shaft Load ..... Axial 4 lbs., Radial 8 lbs.
Torque ..... Starting ..... < 0.4 oz. in.
Running ..... < 0.2 oz. in..
Inertia ..... 1.8×10^{-4} oz. in/sec^2

ELECTRICAL

Code ..... Incremental
Supply Voltage ..... +5 +/-10% @ 135ma max.
Output ..... Dual channel quadrature plus index w/ complements.
Output Type ..... TTL Buffer/Driver (7406) open collector
Maximum Sink Current..... 40 mA
Frequency Response ..... 100 kHz Data, 40 kHz Index
Temperature..... 0 to 80° C operating
-25 to 90° C storage

TERMINATION

Header ..... 8 pin single row PC board header
Mating Connector ..... Molex 22-01-3087 or equivalent

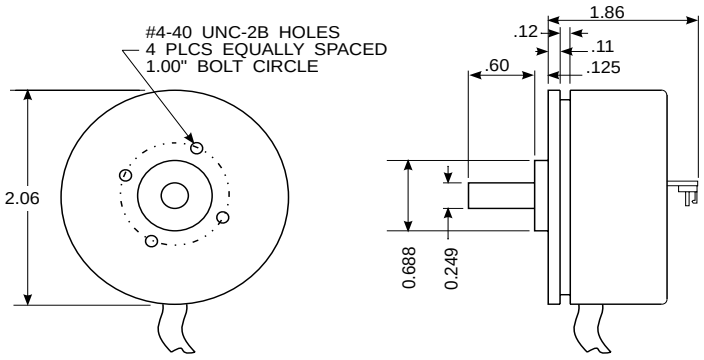

Mechanical Diagram

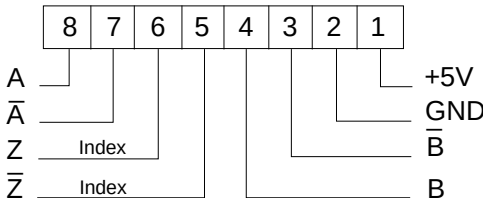

Pinout Diagram

MicroKinetics Corporation 2117-A Barrett Park Drive Kennesaw, GA 30144 Tel (770) 422-7845 Fax (770) 422-7854